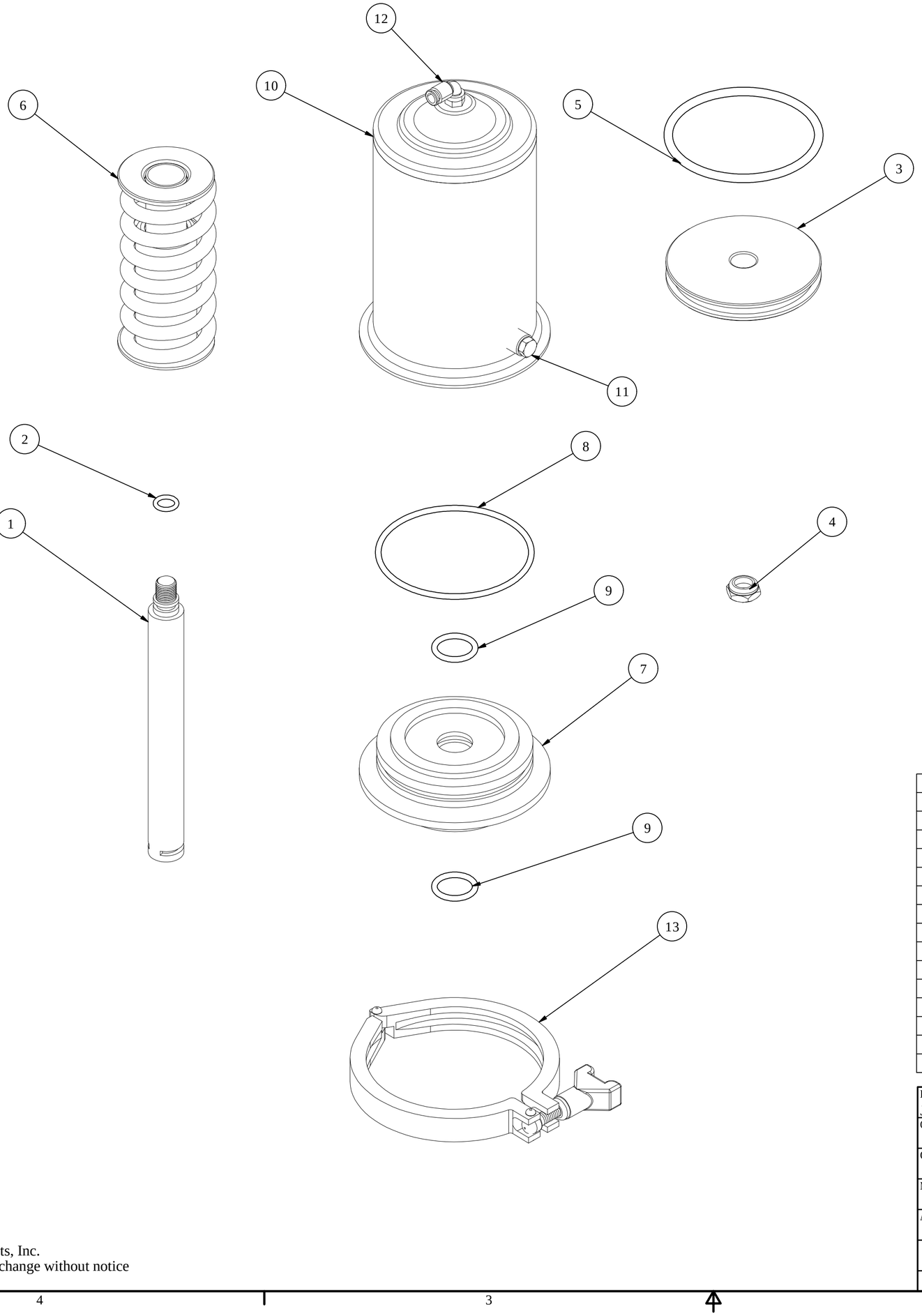

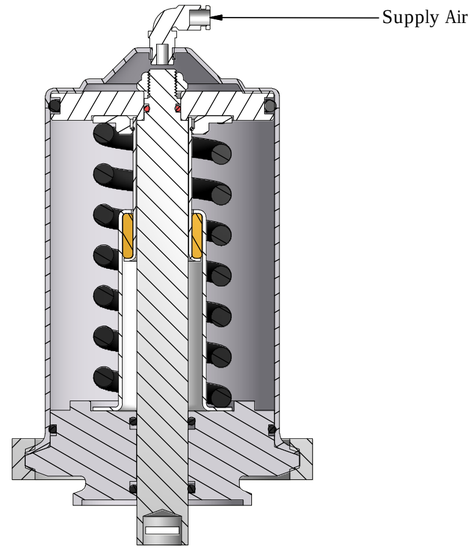

Theory of Operation: Normally Open/Air-To-Close
Air is supplied to the top air port of the actuator forcing the piston down, forcing the valve stem down to close the valve. When supply air is removed the spring returns the valve stem up, opening the valve.

Warning Remove all supply air before performing maintenance

Technical Specifications:
Min. Pressure = 90 PSI
Max. Pressure = 120 PSI
O-ring Lubrication = Petrol-Gel

SP10-ACTUATOR PARTS LIST			
ITEM	QTY	PART NUMBER	DESCRIPTION
1	1	SP10-2D	Actuator Stem
2	1	SP10-6 **	Upper Stem O-Ring (Red Viton)
3	1	SP10-2	Piston
4	1	SP10-12	Stem Nut
5	1	SP10-8 **	Piston O-Ring (Buna)
6	1	SP10-5	Spring and Cage Assy
7	1	SP10-4	Actuator Foot
8	1	SP10-9 **	Foot O-Ring (Buna)
9	2	SP10-7 **	Lower Stem O-Ring (Buna)
10	1	SP10-1	Cylinder Assy.
11	1	SP10-15BV	Vent Filter Plug 1/8" NPT x Cv=.1
12	1	SP10-14-NBP	Air Coupling 1/8" NPT x 1/4" Poly
13	1	SP13HC-4"	Clamp
**	included in	SP20-SK	Seal Kit

DRAWN JE	3/19/2013	Stainless Products, Inc.	
CHECKED		TITLE	
QA		SP10 Actuator	
MFG			
APPROVED		SIZE C	DWG NO SP-10 Actuator
		SCALE	SHEET 1 OF 1

© Stainless Products, Inc.
Content subject to change without notice